KOHLER®
IN POWER. SINCE 1920.

Generator Fuel Systems

Bill Schneeloch
Director of Engineering

Kinsley Group Product Line

Kohler Standby Gas and Diesel Generators

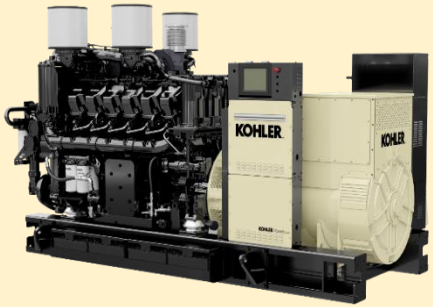

Kohler Gas Reciprocating Engine Cogeneration

Tedom Packaged Reciprocating CHP

Opra Gas Turbine Cogeneration

Disclaimer

- This presentation is an overview of our understanding of U.S. standards and regulations – not a legal interpretation.
  - Emissions regulations are complex and always subject to change. Please make sure to obtain your own legal interpretation.
  - Industry standards change on a scheduled implementation date but may not be accepted by your local municipality. Furthermore regardless of what standard is adopted the AHJ has final determination.

- You can obtain information documents at the following websites:
  - Emission Information: http://www.epa.gov
  - Implementation Information: http://epa.gov/ttn/atw/icengines/imp.html#table
  - IBC Equipment Approval List: http://www.ibcapproval.com
  - OSHPD Pre Approved Equipment List: http://www.oshpd.ca.gov/FDD/Pre-Approval/SpecSeisCert-lrgeScrn-wModelCol.html
  - NFPA Standards: http://www.nfpa.org/

Agenda

- Natural Gas
- Landfill Gas
- LP Vapor
- LP Liquid
- Dual Fuel
- Diesel
  - Wet Stacking
- Alternate Fuels (Bio Diesel, Kerosene, JP4)
- Bi Fuel
- Codes and Standards

Natural Gas

-Natural gas consists mainly of methane, a compound with one carbon atom and four hydrogen atoms – CH_4

-Because natural gas is colorless, odorless, and tasteless, distributors add mercaptan (a chemical that smells like sulfur) to give natural gas a distinct unpleasant odor (it smells like rotten eggs). This added odor serves as a safety device by allowing it to be detected in the atmosphere in cases where leaks occur.-

-Heat Content is approximately 890 BTU/ ft3

Typical Natural Gas System

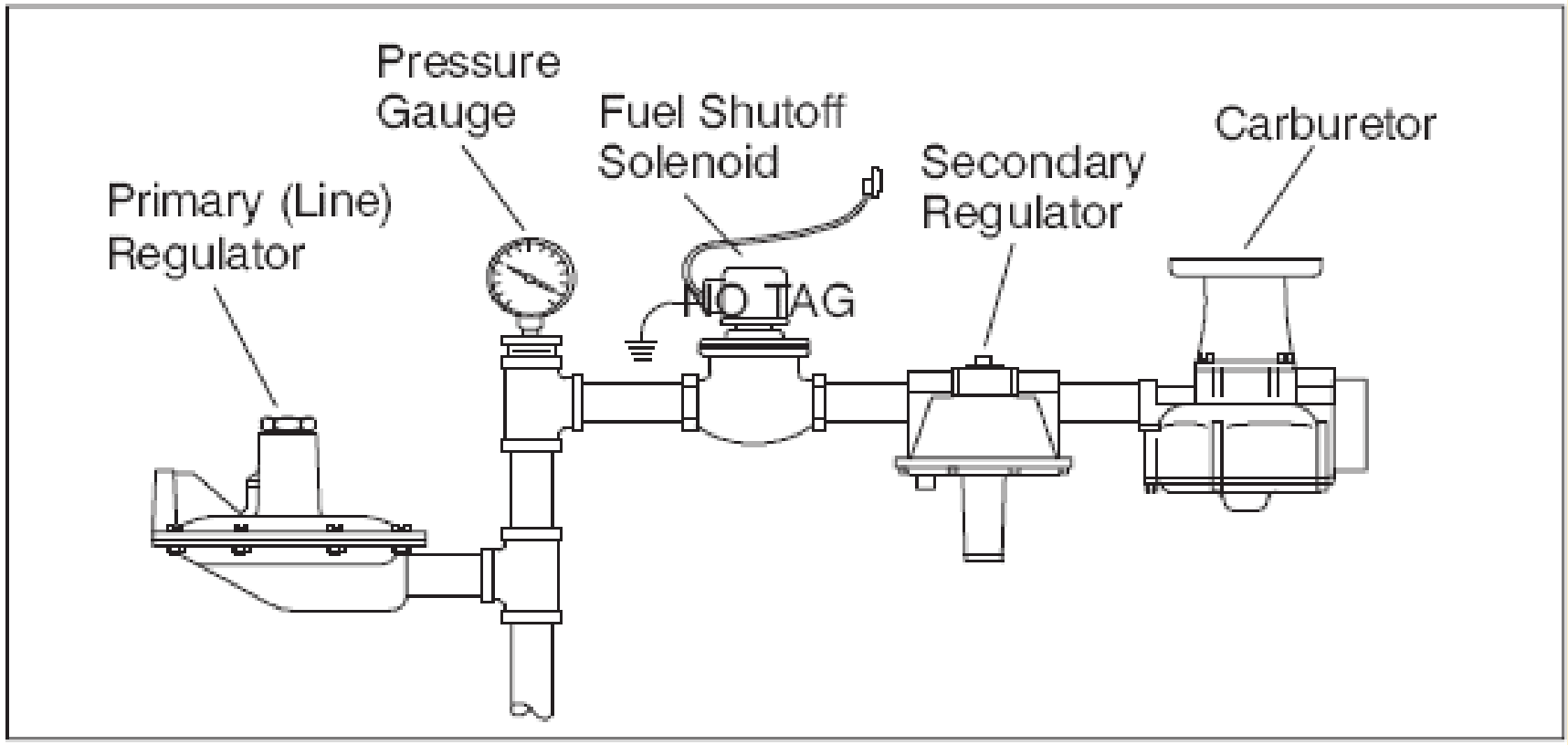

Nat Gas - Advantages

- Utility pipeline source eliminates the need for a fuel storage tank

- Engines are less expensive than diesel below 150kW

- Fuel is clean burning which improves reliability

Nat Gas Disadvantages

- Cannot be used for life safety applications that require “on site” fuel storage.
- Engines are significantly more expensive than diesel above 150kW

NFPA 110

5.5.1 The fuel supplies specified in 5.1.1(1) and 5.1.1(2) for energy converters intended for Level 1 use <u>shall not be used for any other purpose</u>

NEC 700.12.B 2+3

(2) Internal Combustion Engines as Prime Movers. Where internal combustion engines are used as the prime mover, an on-site fuel supply shall be provided with an on-premises fuel supply sufficient for not less than 2 hours' full-demand operation of the system.

(3) Dual Supplies. Prime movers shall not be solely dependent on a public utility gas system for their fuel supply or municipal water supply for their cooling systems. Means shall be provided for automatically transferring from one fuel supply to another where dual fuel supplies are used.

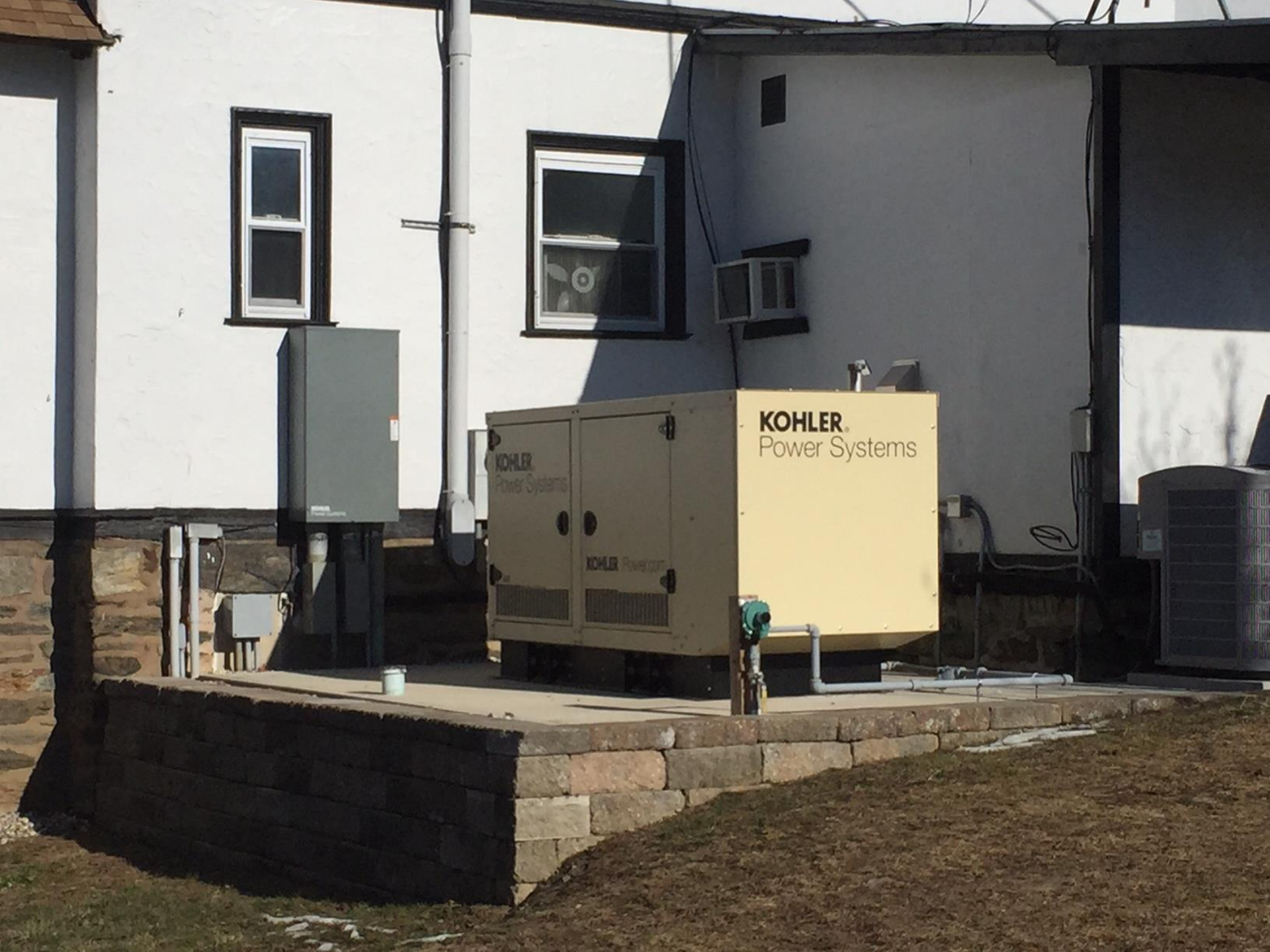
KOHLER
Power Systems

Landfill Gas (LFG)

Landfill gas (LFG) is a natural byproduct of the decomposition of organic material in landfills. LFG is composed of roughly 50 percent methane (the primary component of natural gas), 50 percent carbon dioxide (CO_2) and a small amount of non-methane organic compounds.

- While the main advantage is LFG being a renewable fuel source, the main disadvantage in using this for an engine fuel is presence of siloxanes.
- Siloxanes are non-toxic silicon-bearing organic compounds that are added to many domestic products such as deodorants to improve their texture and feel. The affect on engines is reduced lifespan, increased maintenance, and additional cost for fuel filtering.
- Heat Content is roughly 450 BTU per ft3

Landfill Gas Collection System

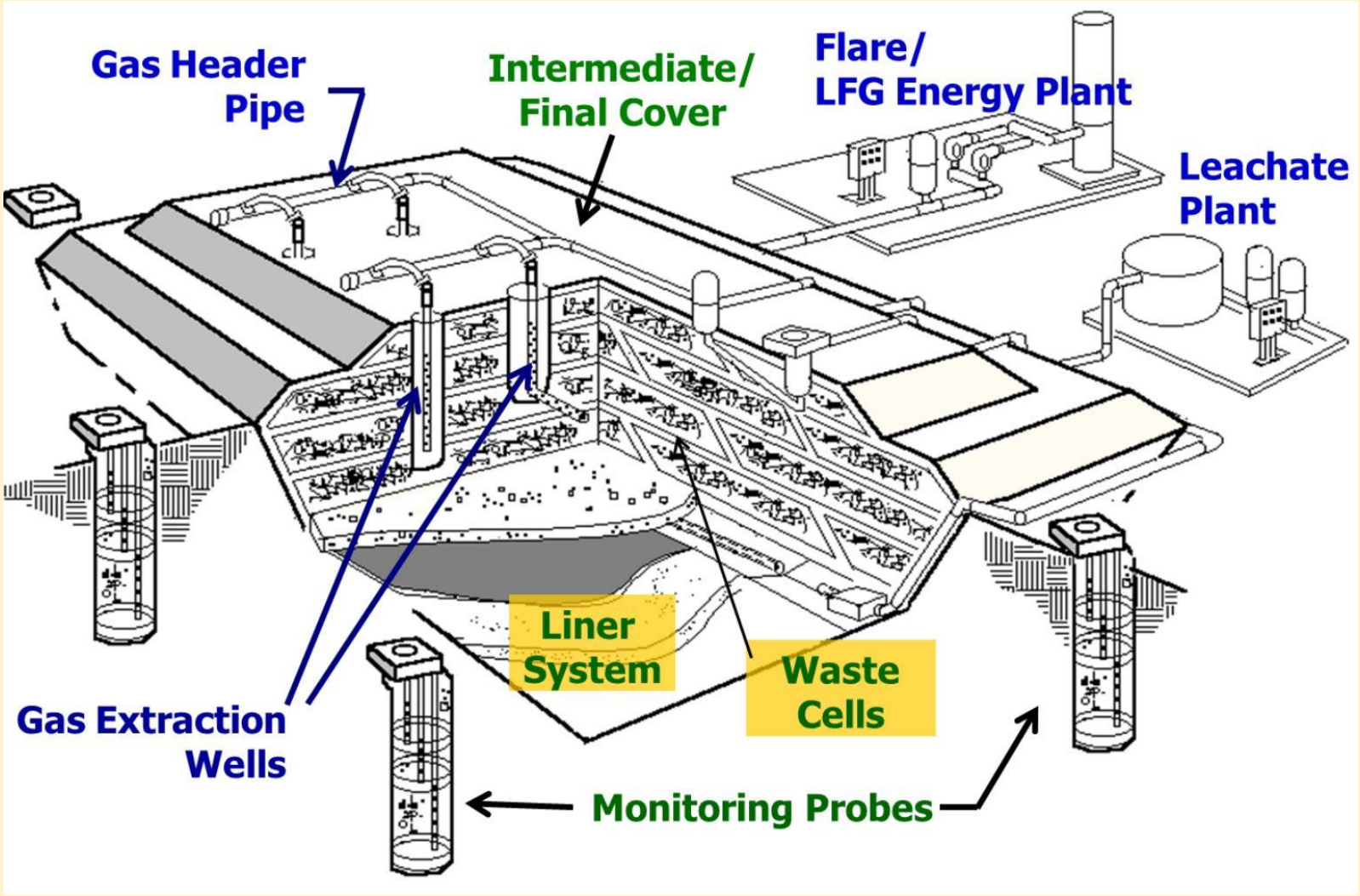

LP Vapor

- Has the advantage of clean burning natural gas and on-site fuel supply
- Disadvantage of additional expense of a fuel storage tank and possible a fuel vaporizer.
- Heat content approximately 2500 BTU per ft3

LP Liquid

- Propane is drawn from the bottom of the fuel storage tank and vaporized at the engine.
- Typically used in very cold environments or where the tank surface area does not allow sufficient vaporization rate.

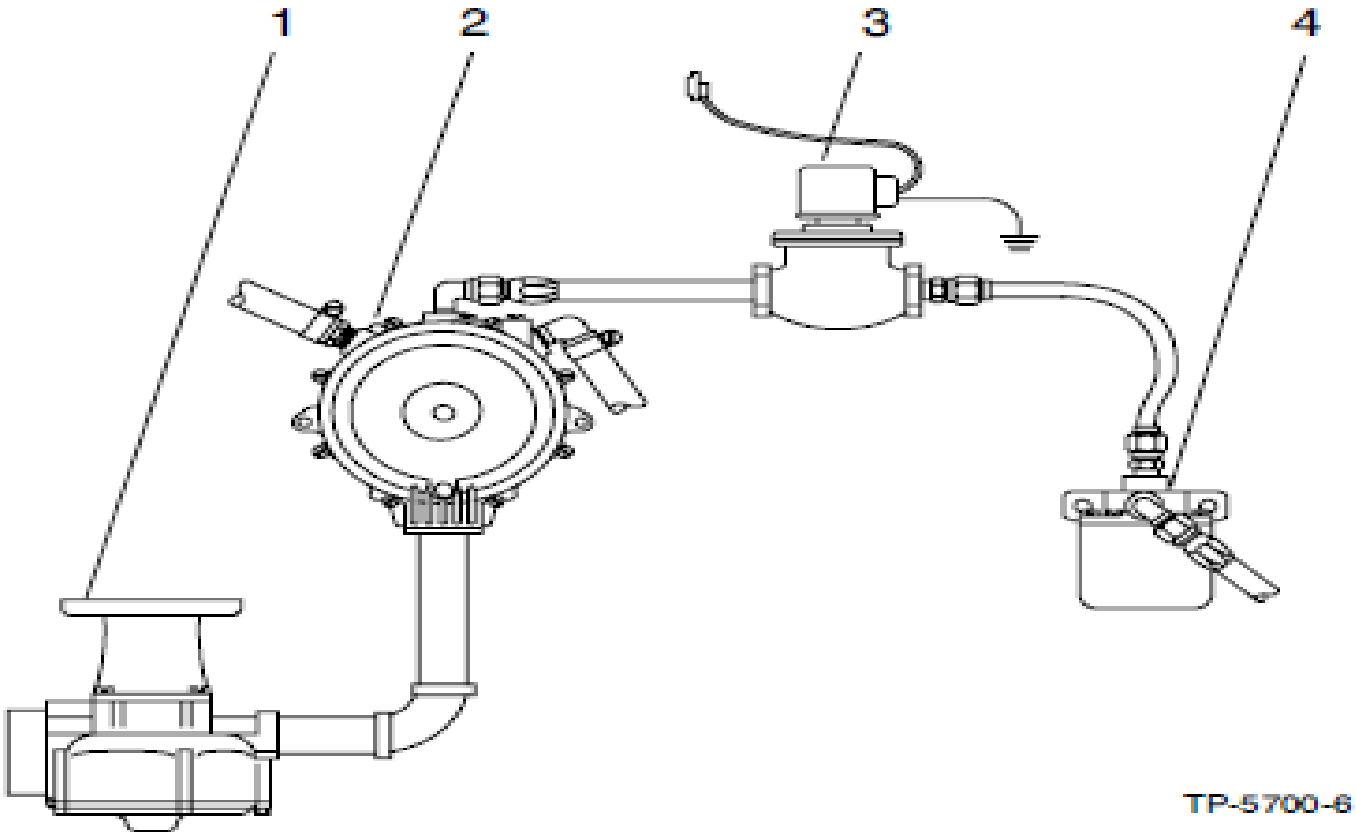

1. Carburetor
2. Converter (vaporizer)
3. Solenoid valve (quantity of two in series may be required for UL applications)
4. LP gas filter (supplied by gas supplier or installer)

Dual Fuel – Nat Gas / LP

- Fuel system is set up to operate on either natural gas or propane. It can be either a manual change-over or automatic.
- Complies with the onsite fuel requirement for life safety applications
- There is a de-rate when changing from nat gas to LP or LP to nat gas depending on the engine.

Diesel Fuel

- Published kW ratings are based on operation with #2 diesel fuel
- Diesel fuel is readily available thruout the world
- Diesel fuel systems comply with the life safety requirement for onsite fuel.
- Diesel generators are slightly more expensive than gaseous fueled below 150kW.
- Diesel fuel is relatively stable and can be stored for long periods of time without deterioration
- Diesel engines have no ignition systems that require periodic maintenance

Diesel Cycle

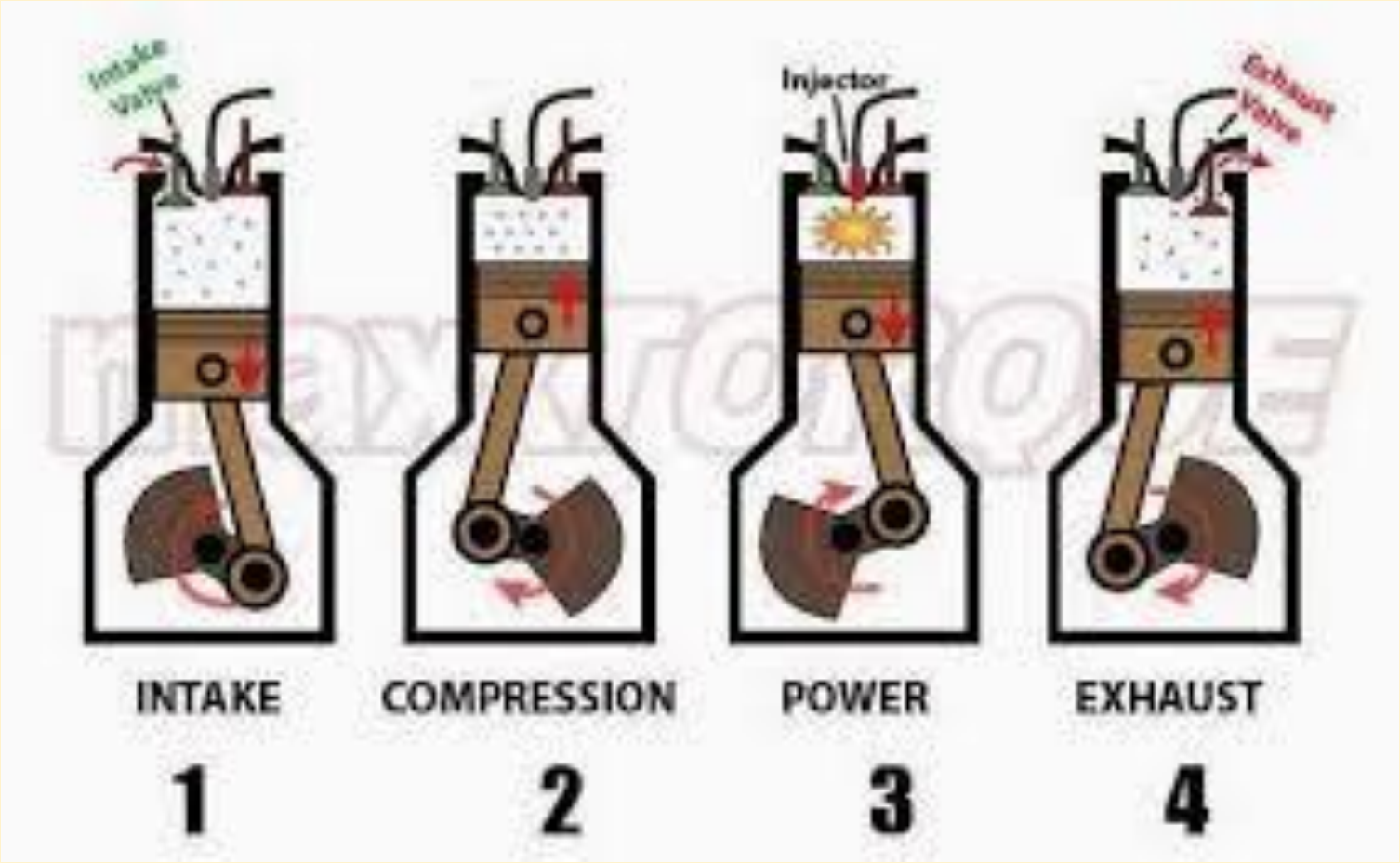

What is Wet Stacking ?

Wet Stacking occurs when a diesel engine has to operate below its rated output level. When this happens, the engine starts to over-fuel or “wet stack.” Diesel engines, typically used in generators, are created with the idea that they will be operating with a load in the 70-80% range of rated output. So, when an engine operates for a long period of time below 40% rated output, it will began to over fuel. Specifically, this happens because the injection tips begin to carbonize and disrupt the fuel spray pattern.


CLEAN FUEL INJECTORS


DIRTY FUEL INJECTORS

What Causes Wet Stacking ?

Like all internal combustion engines, to operate at maximum efficiency a diesel engine has to have exactly the right air-to-fuel ratio and be able to sustain its designed operational temperature for a complete burn of fuel. When a diesel engine is operated on light loads, it will not attain its correct operating temperature. When the diesel engine runs below its designed operating temperature for extended periods, unburned fuel is exhausted and noticed as wetness in the exhaust system, hence the phrase wet stacking.

How Are Wet Stacking Issues Addressed ?

The obvious solution is to always run the generator set with an electrical load that reaches the designed operational temperature of the diesel, or approximately 75% of full load. Built-up fuel deposits and carbon can be removed by running the diesel engine at the required operational temperature for several hours if wet stacking has not yet reached the level where carbon buildup can only be removed by a major engine overhaul.

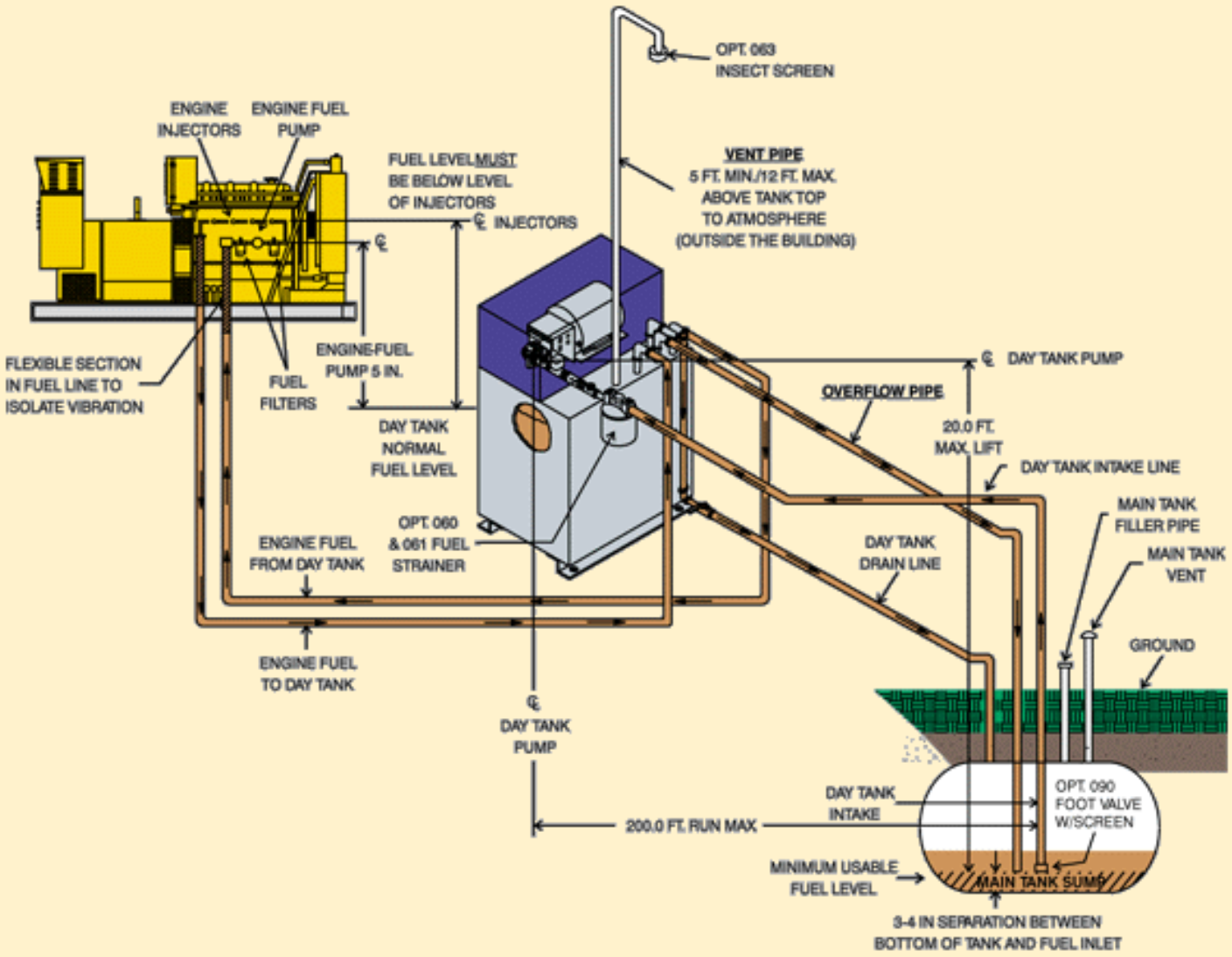
OPT. 063
INSECT SCREEN
ENGINE INJECTORS
ENGINE FUEL PUMP
FUEL LEVEL MUST BE BELOW LEVEL OF INJECTORS
℄ INJECTORS
VENT PIPE
5 FT. MIN./12 FT. MAX. ABOVE TANK TOP TO ATMOSPHERE (OUTSIDE THE BUILDING)
FLEXIBLE SECTION IN FUEL LINE TO ISOLATE VIBRATION
FUEL FILTERS
ENGINE FUEL PUMP 5 IN.
DAY TANK NORMAL FUEL LEVEL
℄ DAY TANK PUMP
OVERFLOW PIPE
20.0 FT. MAX. LIFT
DAY TANK INTAKE LINE
MAIN TANK FILLER PIPE
MAIN TANK VENT
OPT. 060 & 061 FUEL STRAINER
ENGINE FUEL FROM DAY TANK
DAY TANK DRAIN LINE
GROUND
ENGINE FUEL TO DAY TANK
℄ DAY TANK PUMP
DAY TANK INTAKE
OPT. 090 FOOT VALVE W/SCREEN
200.0 FT. RUN MAX.
MINIMUM USABLE FUEL LEVEL
MAIN TANK SUMP
3-4 IN SEPARATION BETWEEN BOTTOM OF TANK AND FUEL INLET


TRANSFIT

KINSLEY POWER SYSTEMS

KOHLER
IN POWER. SINCE 1920.

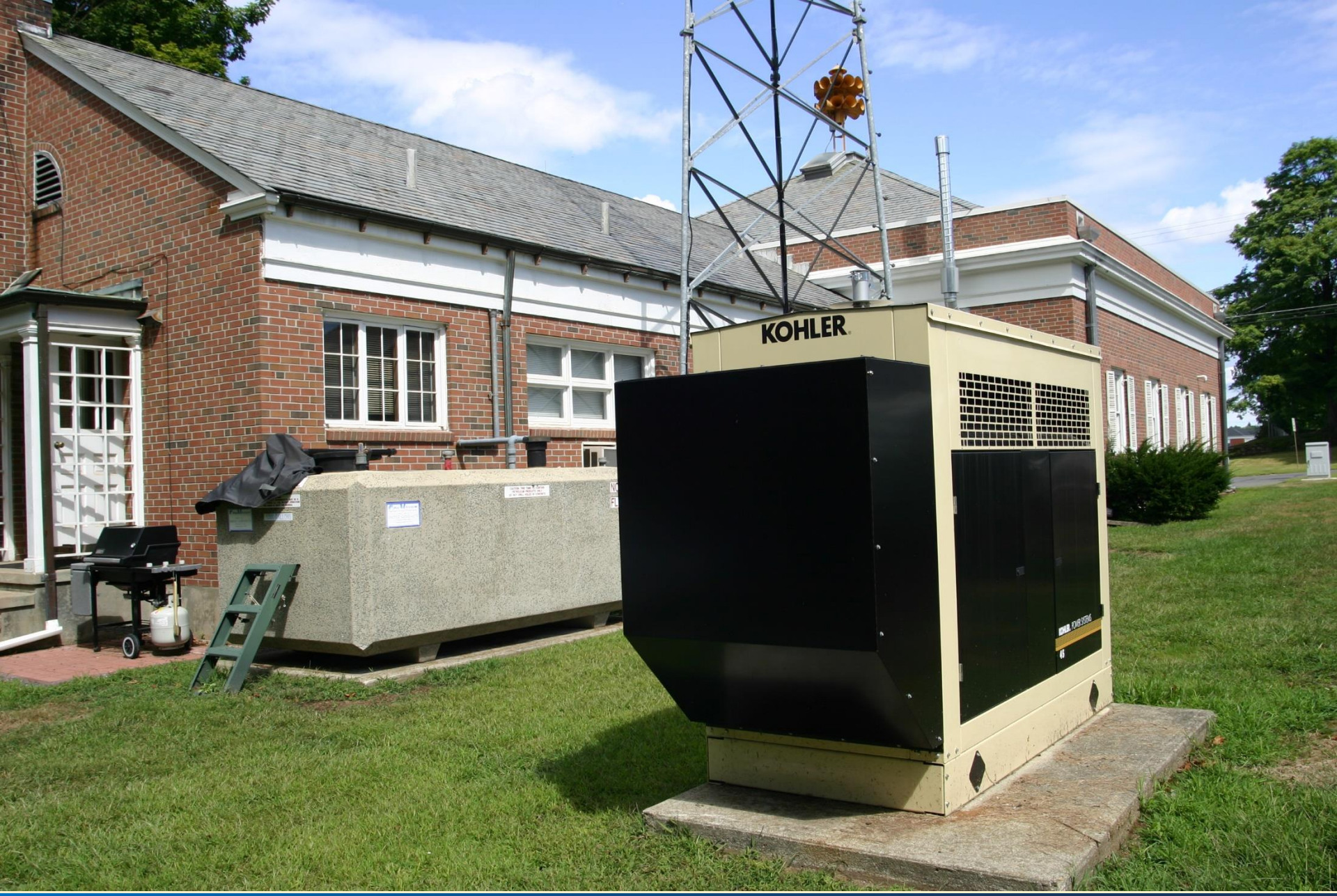

KINSLEY POWER SYSTEMS

KOHLER
IN POWER. SINCE 1920.

Standard Sub-Base Tank Features:

Extended Operation

Usable tank capacity offers full load standby operation of up to 48 hours or more.

►**UL Listed**

Secondary containment generator base tank meets UL 142 special purpose tank requirements.

►**NFPA compliant**

Designed to comply with the installation standards of NFPA 30, NFPA 37 and NFPA 110

►**Integral external lift lugs**

Enables crane with spreader-bar lifting of complete package (empty tank, mounted gen-set and enclosure) to ensure safety.

►**Emergency pressure relief vent caps**

Meets UL requirements - insures adequate venting of inner and outer tank under extreme pressure and/or emergency conditions

►**Atmospheric vent cap**

Oversized 2" vent is raised above lockable fuel fill

Standard Sub-Base Tank Features - continued

►**Low fuel level and leak detection switch**
Annunciates a contained primary tank fuel leak or a 50% low fuel level condition at Generator Set Control
►**Full width electrical stub-up**
Easy access via removable end channel.
►**Fuel transfer system**
Tank top mounting bracket offers location for (optional) fuel transfer system for extended generator set operation or for customer
specified tank monitoring
►**Rain runoff**
Included when tanks extend beyond the enclosure, ensures rain run-off.

Alternate Fuels

- **Bio-diesel**

While 5% blends are preferred (B5), biodiesel concentrations up to a 20% blend (B20) in petroleum diesel fuel can be used in all John Deere engines.

Biodiesel blends up to B20 can be used ONLY if the biodiesel (100% biodiesel or B100) meets ASTM D6751 (US), EN 14214 (EU), or equivalent specification.
Expect a 12% reduction in power and a 18% reduction In fuel economy when using B20.

Bio Diesel -continued…

The following must be considered when using biodiesel blends up to B20:

- • Cold weather flow degradation
- • Stability and storage issues (moisture absorption,
- oxidation, microbial growth)
- • Possible filter restriction and plugging (usually a
- problem when first switching to biodiesel on used
- engines.)
- • Possible fuel leakage through seals and hoses
- • Possible reduction of service life of engine components

The following must **<u>also</u>** be considered when using biodiesel blends above B20.

- • Possible coking and/or blocked injector nozzles, resulting in power loss and engine misfire if John Deere approved fuel conditioners containing detergent/dispersant additives are not used
- • Possible crankcase oil dilution, requiring more frequent
- oil changes
- • Possible corrosion of fuel injection equipment
- • Possible lacquering and/or seizure of internal
- components

- • Possible formation of sludge and sediments
- • Possible thermal oxidation of fuel at elevated temperatures
- • Possible elastomer seal and gasket material degradation
- (primarily an issue with older engines)
- • Possible compatibility issues with other materials
- (including copper, lead, zinc, tin, brass, and bronze) used in fuel systems and fuel handling equipment
- • Possible reduction in water separator efficiency
- • Potential high acid levels within fuel system
- • Possible damage to paint If exposed to biodiesel

Alternate Fuels

- #1 – Kerosene
  - Slightly less heating value (135,000 BTU v 139,000 for #2 diesel)
  - Viscosity is less than #2 diesel
  - Expected power is approximately 10% less than #2 diesel
  - Lower freezing point

- Jet Fuel (JP-4)
  - 50/50 kerosene-gasoline blend.
  - Some fuels that can be used in this engine are for **emergency only** and can cause premature engine and component wear if used long term.
  - Lower density and extremely low viscosity compared to base No. 2-D diesel fuel. Power loss up to 14% can be expected. May be used as an emergency fuel only, with the addition of manufacturer's PREMIUM DIESEL FUEL CONDITIONER (or equivalent)

Winter Operation

Use Winter Grade Fuel When temperatures fall below 0°C (32°F), winter grade fuel (No. 1-D in North America) is best suited for cold-weather operation.

Winter grade fuel has a lower cloud point and a lower pour point.

Cloud point is the temperature at which wax begins to form in the fuel. This wax causes fuel filters to plug.
Pour point is the lowest temperature at which movement of the fuel is observed.

Bi-Fuel

What is Bi-Fuel ?

A Bi-Fuel system uses natural gas introduced into the inlet air of a diesel engine.

Can operate with as much as 70% nat gas/30% diesel.
Still needs the diesel as an ignition source

Advantages:

Cost Savings – onsite fuel storage is less (smaller tanks)
Increased runtime
Cleaner emissions

Disadvantages:

Increased components
Increased cost
Possible warranty issues

Codes and Standards

- NFPA 37 – Standard for installation of Stationary Combustion Engines
- NFPA 54 – National Gas Fuel Code
- NFPA 70 – National Electrical Code
- NFPA 99 – Health Care Facilities
- NFPA 101 – Life Safety Code
- NFPA 110 – Emergency and Standby Power Systems

- UL 2200 – Stationary Engine Generator Systems
- UL 142 – Above Ground Fueltanks

- JCAHO – Joint Commission: Accreditation, Health Care, Certification

NFPA 70 - NEC

- 700.12.B.2 - onsite fuel required
- 700.12.B.3 - not dependent on public utility gas

- 701.12.B.2 - minimum of 2 hours capacity at full load

NFPA 110

- 3.3.5 –Fueltank Definition
- 4.1 & 4.2 – Classification and Type
  - 4.1 Class: minimum time in hours
  - 4.2 – Type: maximum time in seconds to start

- 5.5 – Fuel supplies for level 1 applications shall not be used for any other purpose
- 7.9.5 – Maximum size inside a building is 660 gallons

Table 4.1(a) Classification of EPSSs

Class	Minimum Time
Class 0.083	0.083 hr (5 min)
Class 0.25	0.25 hr (15 min)
Class 2	2 hr
Class 6	6 hr
Class 48	48 hr
Class X	Other time, in hours, as required by the application, code, or user

Table 4.1(b) Types of EPSSs

Designation	Power Restoration
Type U	Basically uninterruptible (UPS systems)
Type 10	10 sec
Type 60	60 sec
Type 120	120 sec
Type M	Manual stationary or nonautomatic — no time limit

Questions

1. Can natural gas be used in a NFPA 110 level 1 application ?

Questions

1. Can natural gas be used in a NFPA 110 level 1 application ?
2. Is landfill gas considered a renewable energy source ?

Questions

1. Can natural gas be used in a NFPA 110 level 1 application ?
2. Is landfill gas considered a renewable energy source ?
3. Is kerosene an acceptable alternate to diesel fuel ?

Questions

1. Can natural gas be used in a NFPA 110 level 1 application ?
2. Is landfill gas considered a renewable energy source ?
3. Is kerosene an acceptable alternate to diesel fuel ?
4. In a LP liquid withdrawal fuel system, is the fuel drawn from the top of the tank or the bottom?

Questions

1. Can natural gas be used in a NFPA 110 level 1 application ?
2. Is landfill gas considered a renewable energy source ?
3. Is kerosene an acceptable alternate to diesel fuel ?
4. In a LP liquid withdrawal fuel system, is the fuel drawn from the top of the tank or the bottom?
5. For a 2mW standby system, would nat gas or diesel be more less costly to purchase ?

Questions

1. Can natural gas be used in a NFPA 110 level 1 application ?
2. Is landfill gas considered a renewable energy source ?
3. Is kerosene an acceptable alternate to diesel fuel ?
4. In a LP liquid withdrawal fuel system, is the fuel drawn from the top of the tank or the bottom?
5. For a 2mW standby system, would nat gas or diesel be more economical.
6. What is the main cause of wet-stacking ?

Questions

1. Can natural gas be used in a NFPA 110 level 1 application ?
2. Is landfill gas considered a renewable energy source ?
3. Is kerosene an acceptable alternate to diesel fuel ?
4. In a LP liquid withdrawal fuel system, is the fuel drawn from the top of the tank or the bottom?
5. For a 2mW standby system, would nat gas or diesel be more economical.
6. What is the main cause of wet-stacking ?
7. Name one disadvantage for using natural gas as a fuel.

Questions

1. Can natural gas be used in a NFPA 110 level 1 application ?
2. Is landfill gas considered a renewable energy source ?
3. Is kerosene an acceptable alternate to diesel fuel ?
4. In a LP liquid withdrawal fuel system, is the fuel drawn from the top of the tank or the bottom?
5. For a 2mW standby system, would nat gas or diesel be more economical.
6. What is the main cause of wet-stacking ?
7. Name one disadvantage for using natural gas as a fuel.
8. What is the capacity of a class 48 emergency power supply system ?

Questions

1. Can natural gas be used in a NFPA 110 level 1 application ?
2. Is landfill gas considered a renewable energy source ?
3. Is kerosene an acceptable alternate to diesel fuel ?
4. In a LP liquid withdrawal fuel system, is the fuel drawn from the top of the tank or the bottom?
5. For a 2mW standby system, would nat gas or diesel be more economical.
6. What is the main cause of wet-stacking ?
7. Name one disadvantage for using natural gas as a fuel.
8. What is the capacity of a class 48 emergency power supply system ?
9. Name one disadvantage of using bio-diesel.

Questions

1. Can natural gas be used in a NFPA 110 level 1 application ?
2. Is landfill gas considered a renewable energy source ?
3. Is kerosene an acceptable alternate to diesel fuel ?
4. In a LP liquid withdrawal fuel system, is the fuel drawn from the top of the tank or the bottom?
5. For a 2mW standby system, would nat gas or diesel be more economical.
6. What is the main cause of wet-stacking ?
7. Name one disadvantage for using natural gas as a fuel.
8. What is the capacity of a class 48 emergency power supply system ?
9. Name one disadvantage of using bio-diesel.
10. Who won the world series in 1991 ?


KOHLER